WILLS WING

Fusion 141 and 150

Owner / Service Manual

October 15, 1998 - Third Edition

Assembly Diagrams Only

Fusion 141 and 150

Owner / Service Manual

Copyright © 1994, 1995, 1996, 1997, 1998 by Sport Kites, Inc. dba Wills Wing, Inc. All rights reserved.
No part of this manual may be reproduced in any form without the express written permission of
Sport Kites, Inc., dba Wills Wing, Inc.

October 15, 1998 - Third Edition

500 West Blueridge Ave • Orange, CA • 92865 • Phone (714) 998-6359 • FAX (714) 998-0647
Internet Web address: http://www.willswing.com • E-mail: comments@willswing.com

Contents

Document ID	Description	Page
83E01.1	Fusion Crossbar Center	2
83E02.2	Fusion Front Leading Edge and Cam VG	3
83E03.2	Fusion Sprog Wire and Bracket (Carbon Sprog)	4
83E07.0	Fusion Sprog (Carbon)	5
83E04.1	Fusion Noseplate	6
83E05.1	Fusion Rear Leading Edge	7
83E06.1	Fusion Keel	8
83E10.0	Fusion Aluminum Sprog and hardware Assembly	9
83E09	VG Folding Base Tube	10
80E08	VG Control Bar	11
Fusion 150 Frame Plans		12
Fusion 141 Frame Plans		13
Button Lock Apex Slider Assembly		14
Fusion Control Bar		15

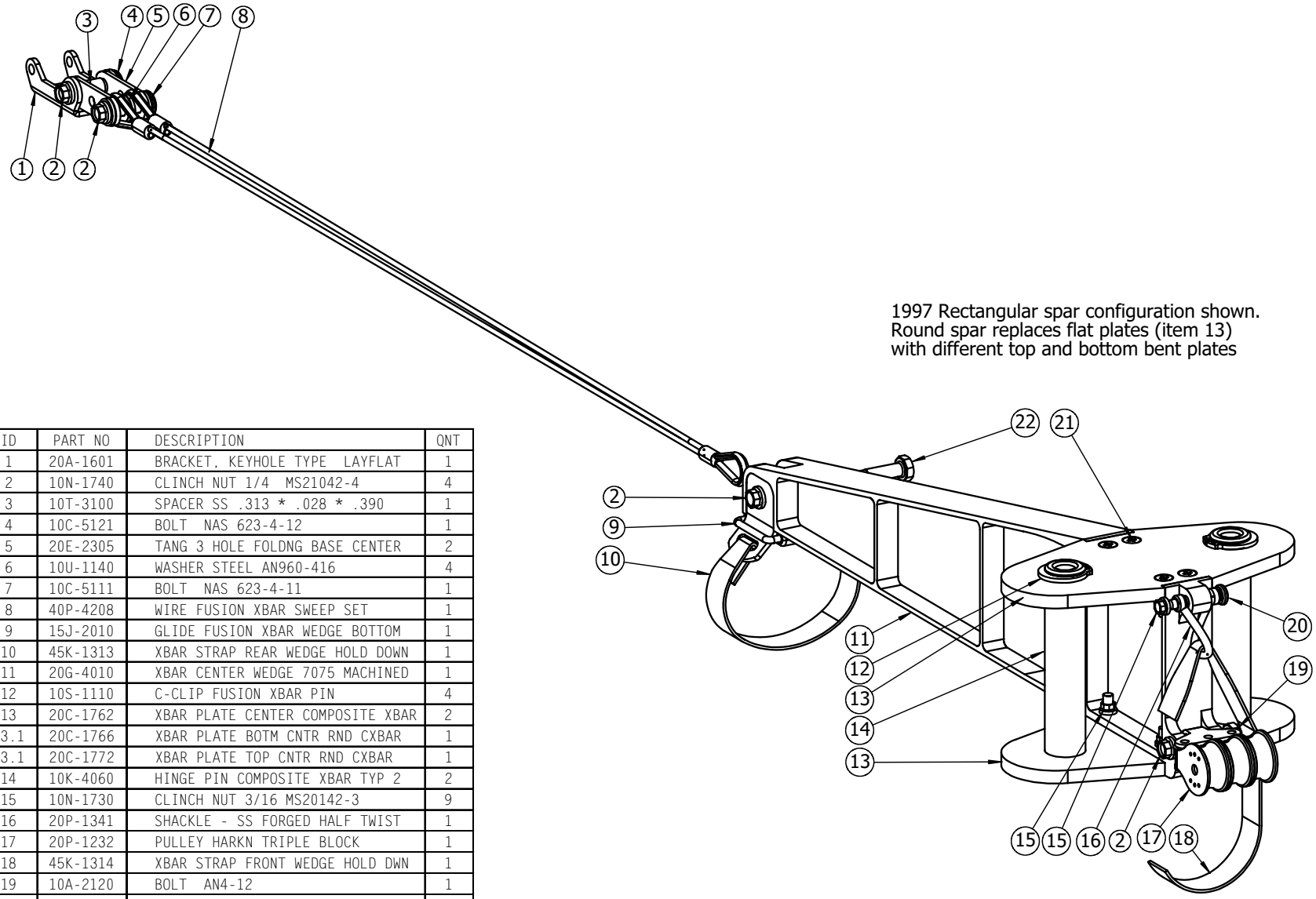

ID	PART NO	DESCRIPTION	QNT
1	20A-1601	BRACKET, KEYHOLE TYPE LAYFLAT	1
2	10N-1740	CLINCH NUT 1/4 MS21042-4	4
3	10T-3100	SPACER SS .313 * .028 * .390	1
4	10C-5121	BOLT NAS 623-4-12	1
5	20E-2305	TANG 3 HOLE FOLDNG BASE CENTER	2
6	10U-1140	WASHER STEEL AN960-416	4
7	10C-5111	BOLT NAS 623-4-11	1
8	40P-4208	WIRE FUSION XBAR SWEEP SET	1
9	15J-2010	GLIDE FUSION XBAR WEDGE BOTTOM	1
10	45K-1313	XBAR STRAP REAR WEDGE HOLD DOWN	1
11	20G-4010	XBAR CENTER WEDGE 7075 MACHINED	1
12	10S-1110	C-CLIP FUSION XBAR PIN	4
13	20C-1762	XBAR PLATE CENTER COMPOSITE XBAR	2
13.1	20C-1766	XBAR PLATE BOTM CNTR RND CXBAR	1
13.1	20C-1772	XBAR PLATE TOP CNTR RND CXBAR	1
14	10K-4060	HINGE PIN COMPOSITE XBAR TYP 2	2
15	10N-1730	CLINCH NUT 3/16 MS20142-3	9
16	20P-1341	SHACKLE - SS FORGED HALF TWIST	1
17	20P-1232	PULLEY HARKN TRIPLE BLOCK	1
18	45K-1314	XBAR STRAP FRONT WEDGE HOLD DWN	1
19	10A-2120	BOLT AN4-12	1
20	10C-4121	BOLT NAS 623-3-12	1
21	10C-1051	BOLT NAS 517-3-5	8
22	10A-2120	BOLT AN4-12	1

WILLS WING
500 BLUERIDGE AVE •ORANGE, CA 92865 •PH/FAX (714)998-6359/998-0647

TITLE: **Fusion Crossbar Center**

Document ID:	DWG ID:	DATE:	REVISED:	BY:
83E01.1	Xbar Plate Center.DRW	04-07-97	12-15-97	Pearson

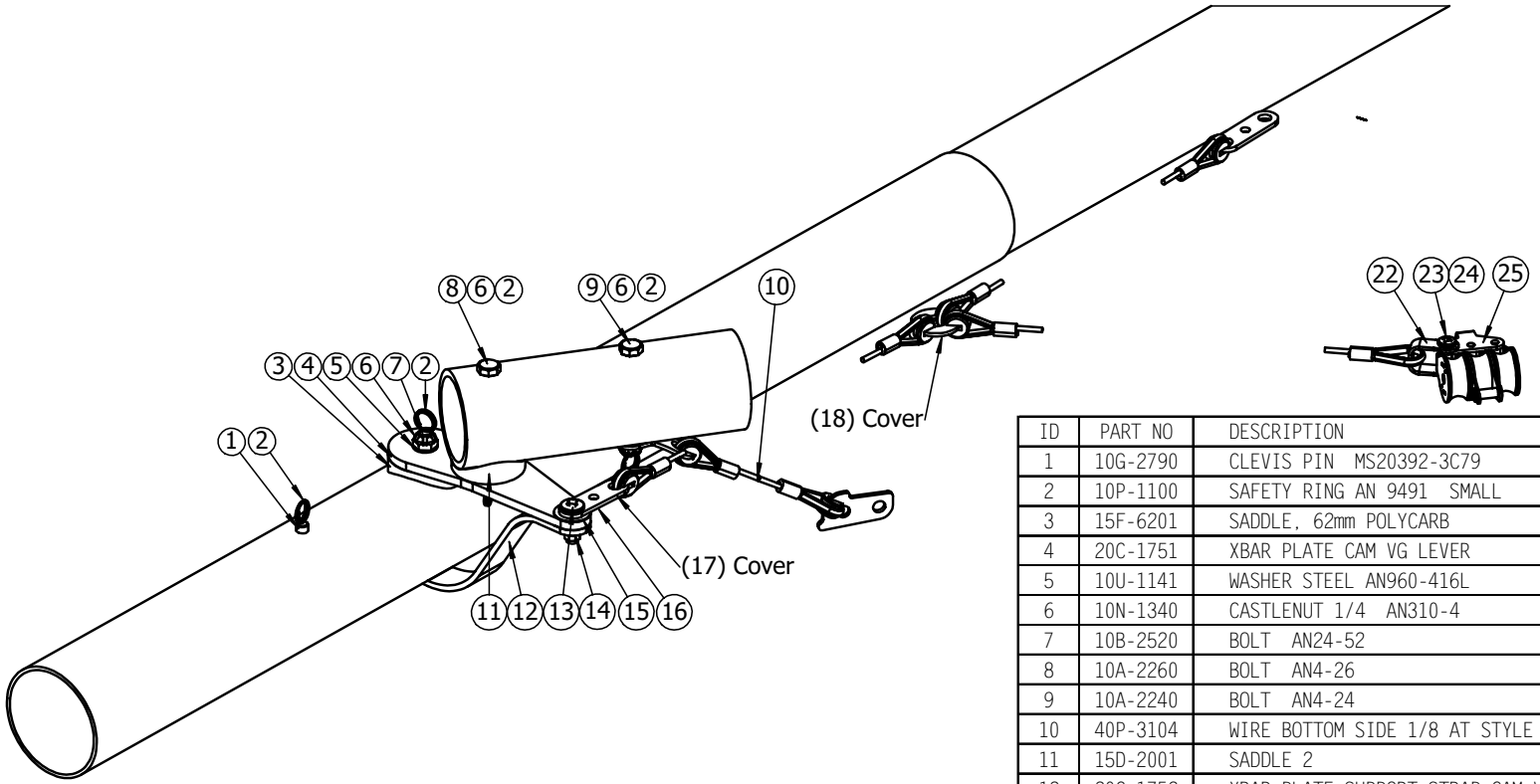

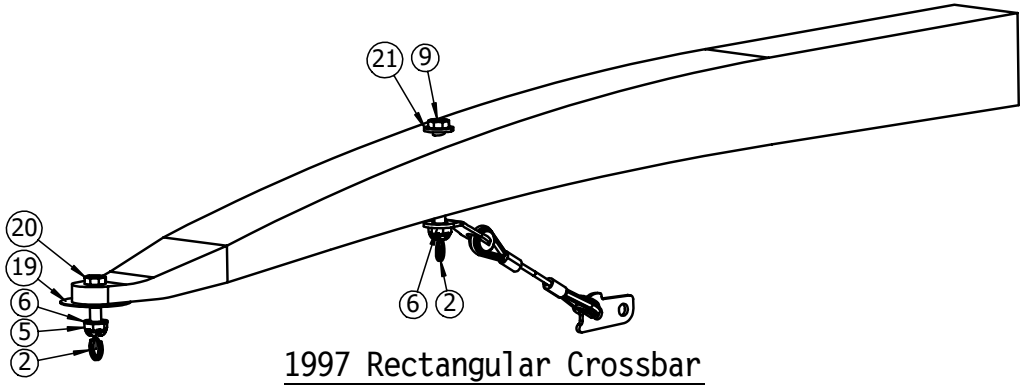

1997 Rectangular Crossbar

ID	PART NO	DESCRIPTION	QNT
1	10G-2790	CLEVIS PIN MS20392-3C79	2
2	10P-1100	SAFETY RING AN 9491 SMALL	8
3	15F-6201	SADDLE, 62mm POLYCARB	4
4	20C-1751	XBAR PLATE CAM VG LEVER	2
5	10U-1141	WASHER STEEL AN960-416L	2
6	10N-1340	CASTLENUT 1/4 AN310-4	6
7	10B-2520	BOLT AN24-52	2
8	10A-2260	BOLT AN4-26	2
9	10A-2240	BOLT AN4-24	2
10	40P-3104	WIRE BOTTOM SIDE 1/8 AT STYLE	2
11	15D-2001	SADDLE 2	2
12	20C-1752	XBAR PLATE SUPPORT STRAP CAM VG	2
13	10C-5071	BOLT NAS 623-4-7	2
14	10N-1740	CLINCH NUT 1/4 MS21042-4	2
15	10U-5125	WASHER NYLON .75 * .316 * .020	2
16	40P-5100	WIRE VG CAM LEVER ASSY	2
17	45G-3066	COVER NEOPRENE FUSION CAM VG WIRE	2
18	45G-3069	COVER NEOPRN CAM VG CABL JNCT	2
19	10U-5240	WASHER NYLON 1.50 * .250 * .02	2
20	10A-2100	BOLT AN4-10	2
21	10U-1400	WASHER MS 15795-210	2
22	20P-1331	SHACKLE - SS HARKN MICRO BLOCK	2
23	10L-1052	SCREW MS27039-0812	2
24	10N-1220	LOCKNUT LOWPRO 0832 SS	2
25	20P-1234	PULLEY HARKN TRIPLE BLK BCKT MFD	1
NS	15C-6219	ENDCAP 62mm OD 58.2 ID	2

WILLS WING
500 BLUERIDGE AVE •ORANGE, CA 92865 •PH/FAX (714)998-6359/998-0647

TITLE: **Fusion Front Leading Edge and Cam VG**

Document ID:	DWG ID:	DATE:	REVISED:	BY:
83E02.2	Fusion FLE.DRW	04-07-97	10-15-98	Pearson

83E03.2 Fusion Sprog Wire and Bracket (Carbon Sprog)

Note:
See 83E10 'Fusion Aluminum Sprog and Hardware Assembly'
for Current Model Configuration

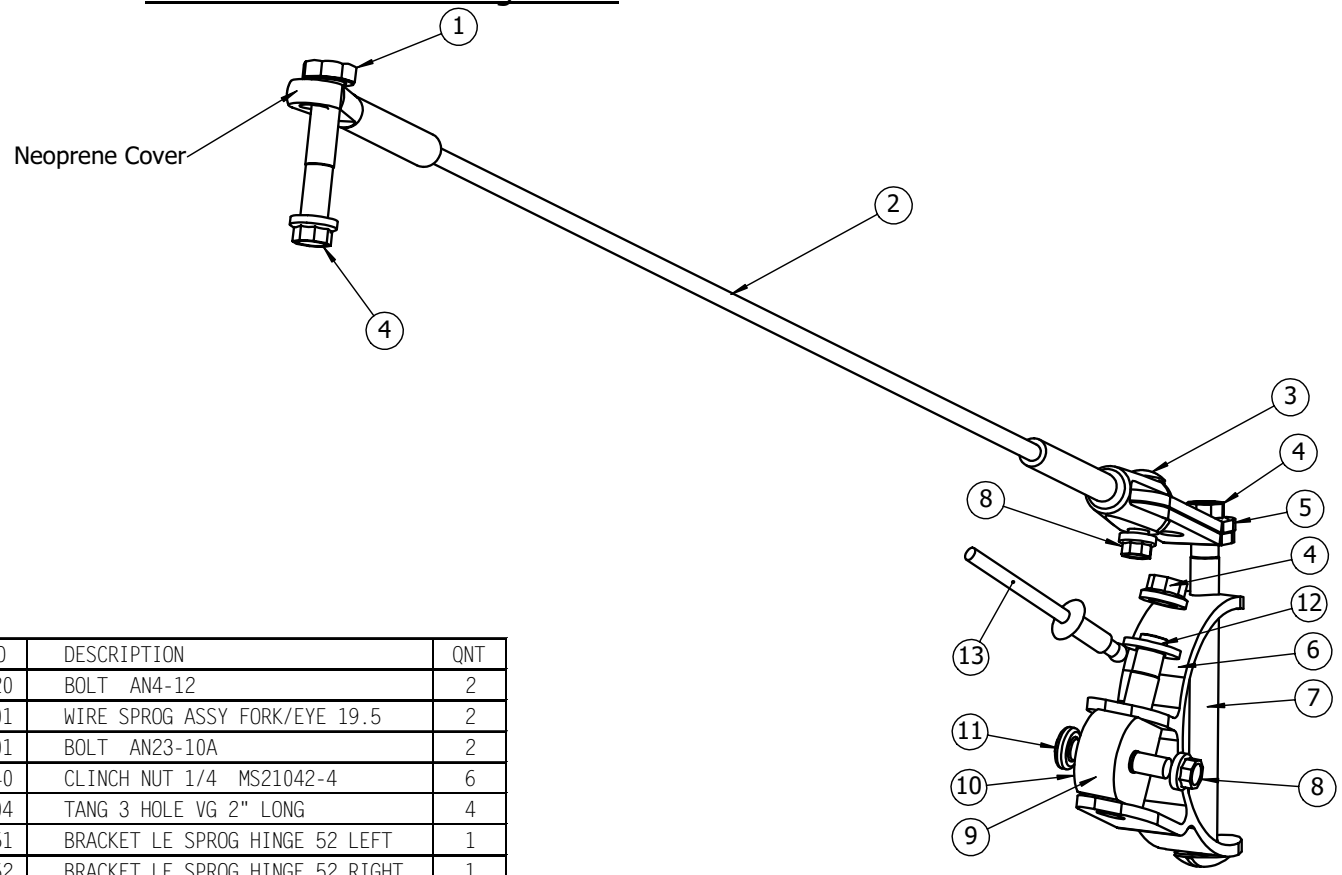

ID	PART NO	DESCRIPTION	QNT
1	10A-2120	BOLT AN4-12	2
2	40P-6001	WIRE SPROG ASSY FORK/EYE 19.5	2
3	10B-1101	BOLT AN23-10A	2
4	10N-1740	CLINCH NUT 1/4 MS21042-4	6
5	20E-2304	TANG 3 HOLE VG 2" LONG	4
6	20G-2451	BRACKET LE SPROG HINGE 52 LEFT	1
6	20G-2452	BRACKET LE SPROG HINGE 52 RIGHT	1
7	10B-2400	BOLT AN24-40	2
8	10N-1730	CLINCH NUT 3/16 MS20142-3	4
9	10B-2201	BOLT AN24-20A	2
10	20G-2448	SPROG FORK HINGE PILLAR	2
11	10C-4081	BOLT NAS 623-3-8	2
12	10U-1140	WASHER STEEL AN960-416	2
13	10R-0366	RIVET AL 3/16 * .375 CHAAPQ6-4	2
NS	45G-3065	COVER NEOPRENE FUSION SPROG	2

WILLS WING
500 BLUERIDGE AVE •ORANGE, CA 92865 •PH/FAX (714)998-6359/998-0647

TITLE: **Fusion Sprog Wire and Bracket (Carbon Sprog)**

Document ID:	DWG ID:	DATE:	REVISED:	BY:
83E03.2	Sprog Wire and Bracket.DRW	04-07-97	10-15-98	Pearson

83E07.0 Fusion Sprog (Carbon)

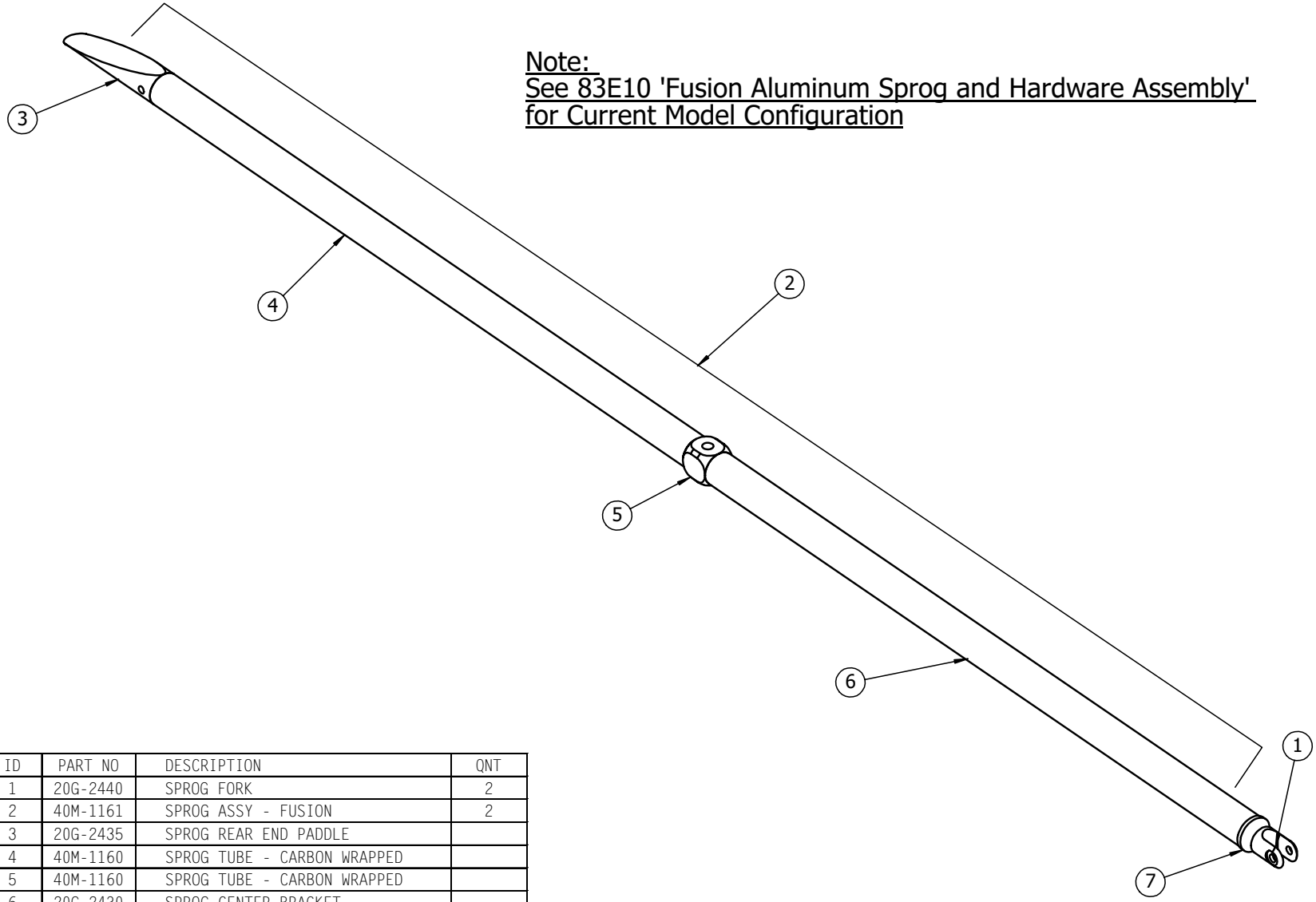

ID	PART NO	DESCRIPTION	QNT
1	20G-2440	SPROG FORK	2
2	40M-1161	SPROG ASSY - FUSION	2
3	20G-2435	SPROG REAR END PADDLE	
4	40M-1160	SPROG TUBE - CARBON WRAPPED	
5	40M-1160	SPROG TUBE - CARBON WRAPPED	
6	20G-2430	SPROG CENTER BRACKET	
7	20G-2445	SPROG FORK THREADED ADJUSTER	

WILLS WING
500 BLUERIDGE AVE • ORANGE, CA 92665 • PH/FAX (714) 998-6359 / 998-0647

TITLE: **Sprog**

Document ID:	DWG ID:	DATE:	REVISED:	BY:
83E07.0	Sprog.DRW	04-07-97	06-10-97	Pearson

T.U.S. .X ± .05
.XX ± .015
.XXX ± .003
.XXXX ± .0005
ANGLES ± 1/2°

ID	PART NO	DESCRIPTION	QNT
1	10A-2321	BOLT AN4-32A	2
2	10A-2341	BOLT AN4-34A	1
3	10A-2301	BOLT AN4-30A	1
4	10U-5125	WASHER NYLON .75 * .316 * .020	2
5	20C-1621	NOSEPLATE RAMAIR TOP EXTENDED	1
6	10U-1141	WASHER STEEL AN960-416L	6
7	20C-1631	NOSEPLATE FUSION BOTTOM SLOTTED	1
8	20E-2321	TANG 1 HOLE 2 SLOT 5/8 WEBBING	2
9	10N-1740	CLINCH NUT 1/4 MS21042-4	4
10	20G-2901	COLLAR KEYHOLE TANG BOLT	1
11	10U-5093	WASHER NYLON .560 *.192 *.015	1
12	10U-8010	WASHER WAVE KEYHOLE ANCHOR	1
13	10N-1730	CLINCH NUT 3/16 MS20142-3	1
14	20C-1501	SAFETY ALUM KEYHOLE ANCHOR	1
15	10L-1061	SCREW PAN 3/16 MS35207-263	1
16	15F-1608	STAND-OFF 1/2	2

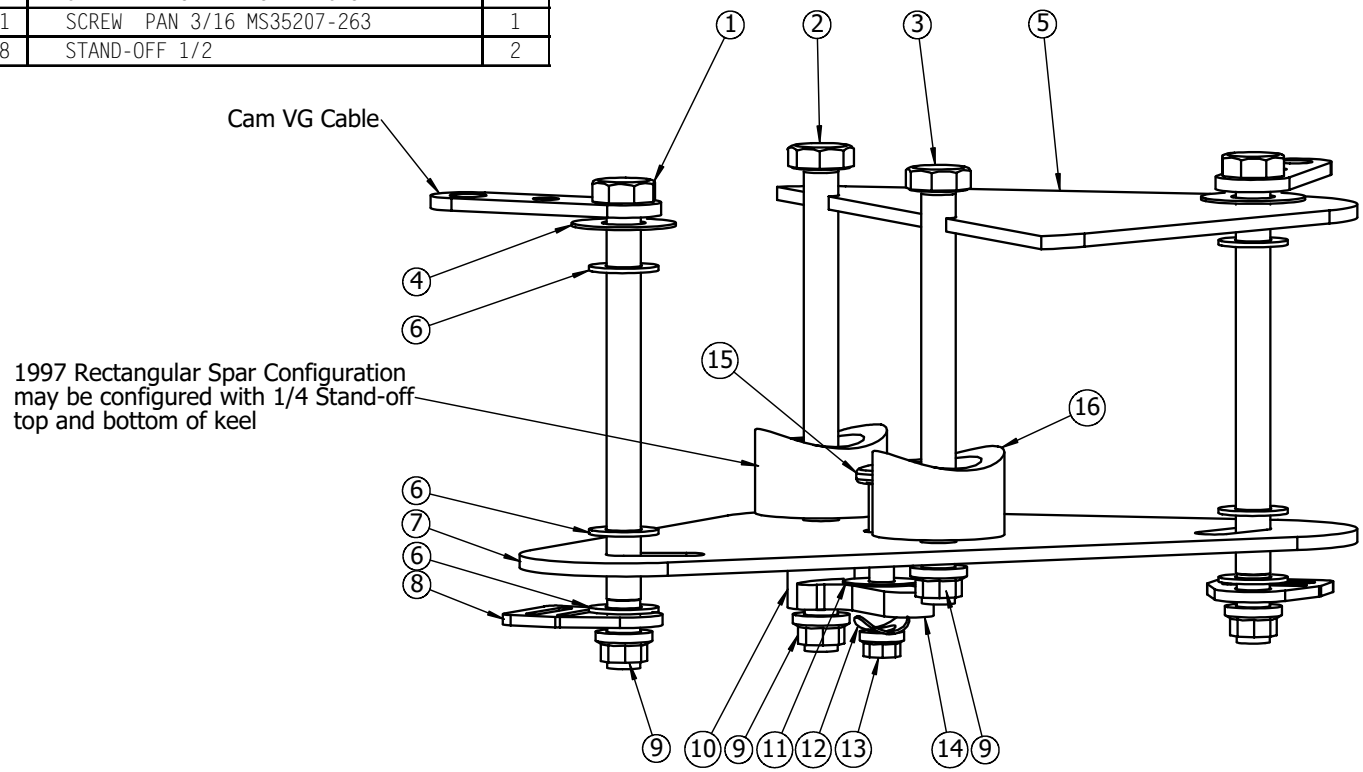

WILLS WING
500 BLUERIDGE AVE •ORANGE, CA 92865 •PH/FAX (714)998-6359/998-0647

TITLE: **Fusion Noseplate**

Document ID:	DWG ID:	DATE:	REVISED:	BY:
83E04.1	Noseplate.DRW	04-07-97	12-15-97	Pearson

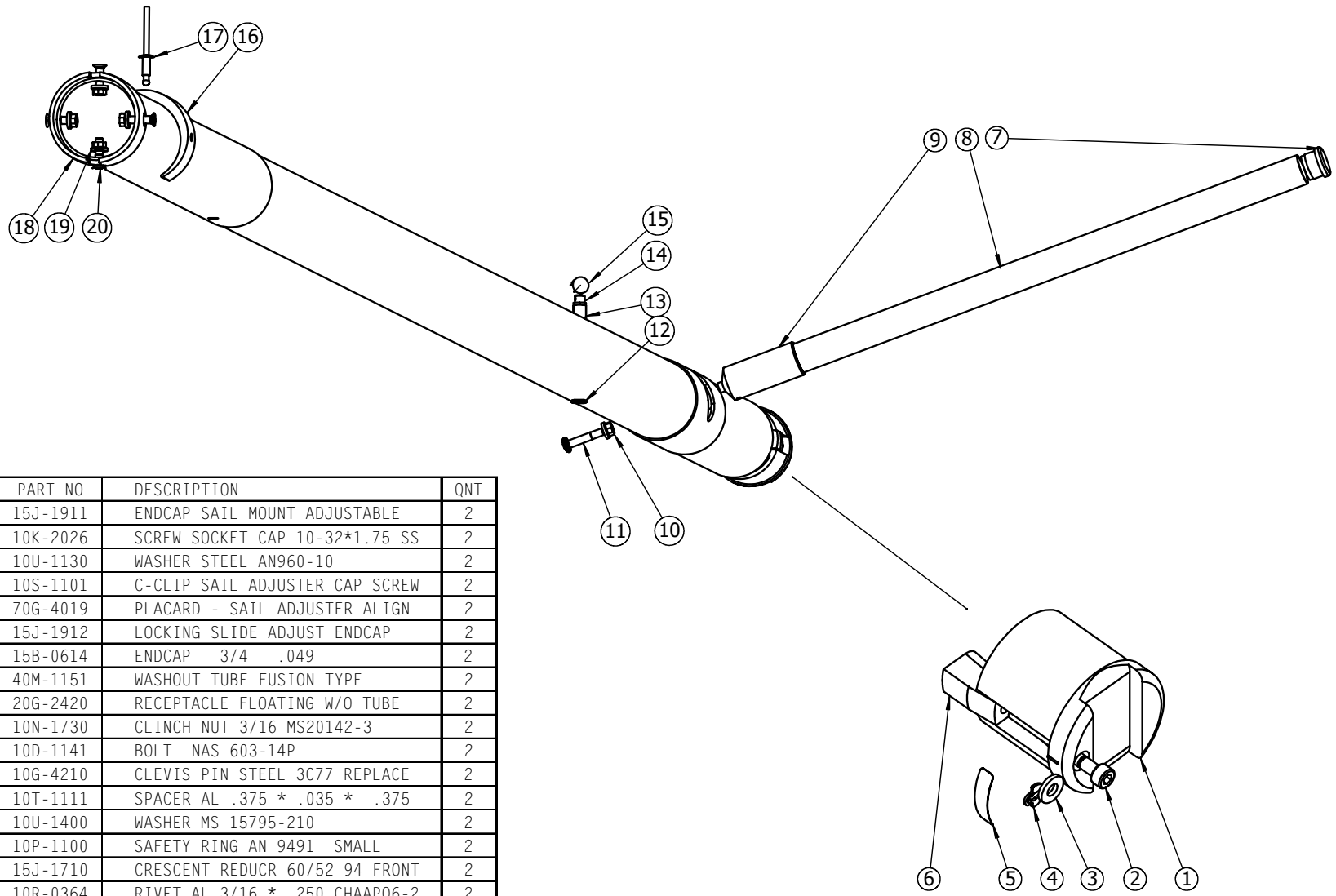

ID	PART NO	DESCRIPTION	QNT
1	15J-1911	ENDCAP SAIL MOUNT ADJUSTABLE	2
2	10K-2026	SCREW SOCKET CAP 10-32*1.75 SS	2
3	10U-1130	WASHER STEEL AN960-10	2
4	10S-1101	C-CLIP SAIL ADJUSTER CAP SCREW	2
5	70G-4019	PLACARD - SAIL ADJUSTER ALIGN	2
6	15J-1912	LOCKING SLIDE ADJUST ENDCAP	2
7	15B-0614	ENDCAP 3/4 .049	2
8	40M-1151	WASHOUT TUBE FUSION TYPE	2
9	20G-2420	RECEPTACLE FLOATING W/O TUBE	2
10	10N-1730	CLINCH NUT 3/16 MS20142-3	2
11	10D-1141	BOLT NAS 603-14P	2
12	10G-4210	CLEVIS PIN STEEL 3C77 REPLACE	2
13	10T-1111	SPACER AL .375 * .035 * .375	2
14	10U-1400	WASHER MS 15795-210	2
15	10P-1100	SAFETY RING AN 9491 SMALL	2
16	15J-1710	CRESCENT REDUCR 60/52 94 FRONT	2
17	10R-0364	RIVET AL 3/16 * .250 CHAAPQ6-2	2
18	20G-3100	REDUCER 60/52 CONCENTRIC	2
19	10N-1730	CLINCH NUT 3/16 MS20142-3	8
20	10K-2020	SCREW NAS 333 CPA-4	8

WILLS WING
500 BLUERIDGE AVE •ORANGE, CA 92865 •PH/FAX (714)998-6359/998-0647

TITLE: **Fusion Rear Leading Edge**

Document ID:	DWG ID:	DATE:	REVISED:	BY:
83E05.1	Fusion RLE.DRW	04-07-97	12-15-97	Pearson

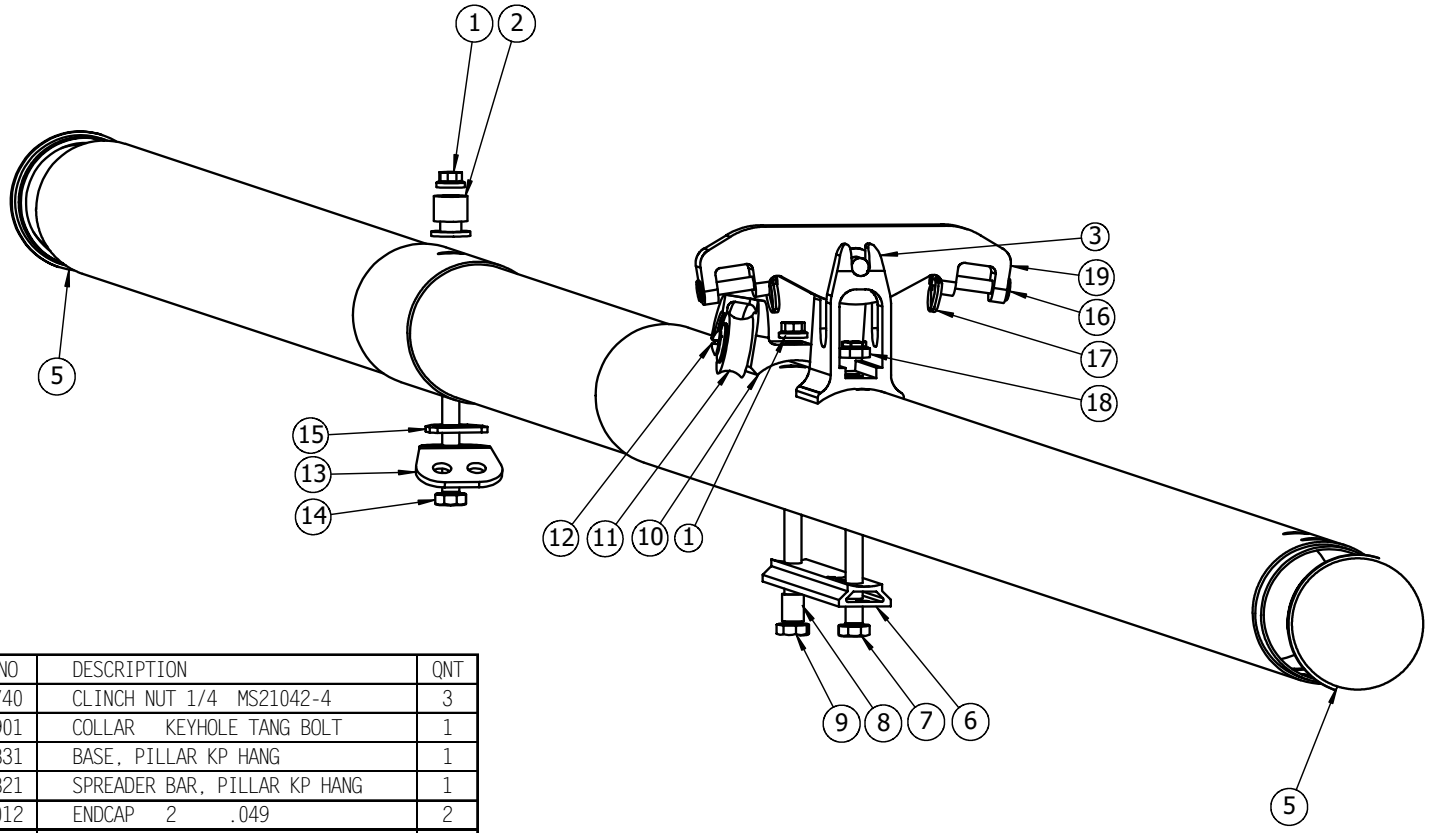

ID	PART NO	DESCRIPTION	QNT
1	10N-1740	CLINCH NUT 1/4 MS21042-4	3
2	20G-2901	COLLAR KEYHOLE TANG BOLT	1
3	20G-2831	BASE, PILLAR KP HANG	1
4	20G-2821	SPREADER BAR, PILLAR KP HANG	1
5	15B-2012	ENDCAP 2 .049	2
6	20G-2104	TRACK LAYFLAT CBAR APEX FUSION	1
7	10A-2251	BOLT AN4-25A	1
8	10T-3100	SPACER SS .313 * .028 * .390	1
9	10A-2321	BOLT AN4-32A	1
10	20G-1510	BRACKET VG PULLEY KEEL MOUNT	1
11	20P-1230	PULLEY HARKN SHEAVE TOP LEG VG	1
12	10B-1101	BOLT AN23-10A	1
13	40P-3303	WIRE SET BOTTOM REAR BALL SWDG	1
14	10A-2311	BOLT AN4-31A	1
15	20E-2321	TANG 1 HOLE 2 SLOT 5/8 WEBBING	1
16	10G-1310	CLEVIS PIN MS20392-2C31	2
17	10P-1100	SAFETY RING AN 9491 SMALL	2
18	10N-1540	FLEXLOC 1/4 LOWPRO AN21FK-428	1
19	20G-2822	SPREADER BAR, PILLAR HANG / WEB	1

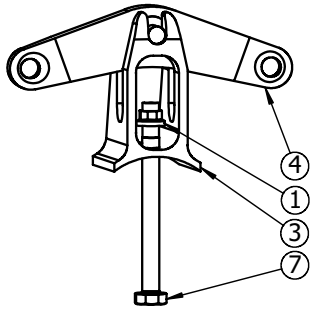

Early 1997 Perlon Hang T

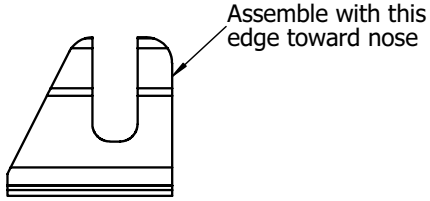

WILLS WING
500 BLUERIDGE AVE •ORANGE, CA 92865 •PH/FAX (714)998-6359/998-0647

TITLE: **Fusion Keel**

Document ID:	DWG ID:	DATE:	REVISED:	BY:
83E06.1	Fusion Keel.DRW	04-07-97	12-15-97	Pearson

83E10.0 Fusion Aluminum Sprog and hardware Assembly

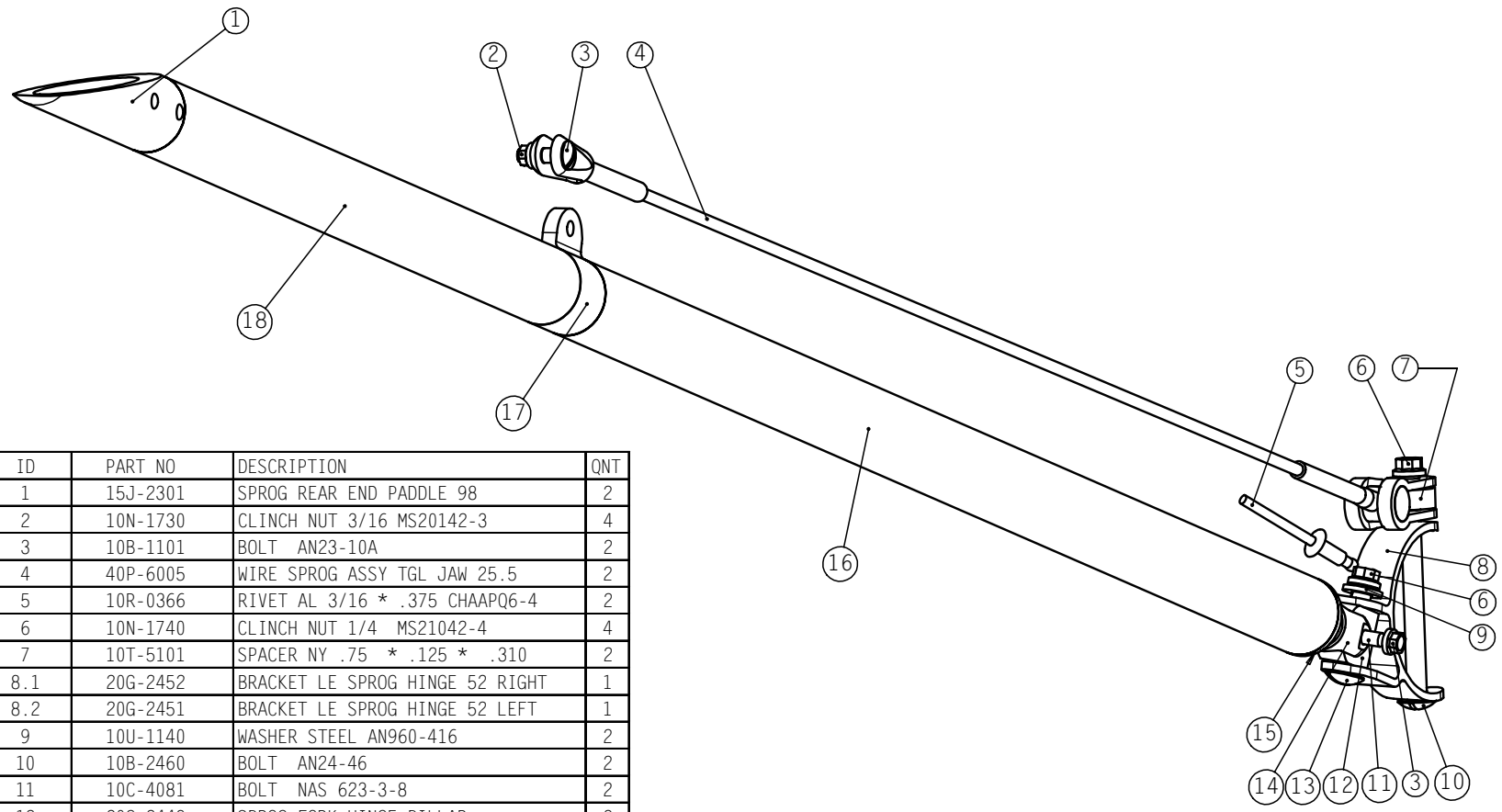

ID	PART NO	DESCRIPTION	QNT
1	15J-2301	SPROG REAR END PADDLE 98	2
2	10N-1730	CLINCH NUT 3/16 MS20142-3	4
3	10B-1101	BOLT AN23-10A	2
4	40P-6005	WIRE SPROG ASSY TGL JAW 25.5	2
5	10R-0366	RIVET AL 3/16 * .375 CHAAPQ6-4	2
6	10N-1740	CLINCH NUT 1/4 MS21042-4	4
7	10T-5101	SPACER NY .75 * .125 * .310	2
8.1	20G-2452	BRACKET LE SPROG HINGE 52 RIGHT	1
8.2	20G-2451	BRACKET LE SPROG HINGE 52 LEFT	1
9	10U-1140	WASHER STEEL AN960-416	2
10	10B-2460	BOLT AN24-46	2
11	10C-4081	BOLT NAS 623-3-8	2
12	20G-2448	SPROG FORK HINGE PILLAR	2
13	10b-2201	BOLT AN24-20A	2
14	20G-2441	SPROG FORK STAINLESS	2
15	20G-2446	SPROG THREADED ADJUSTER 98	2
16	35C-2511-60	TUBE 1.0" * .042" AN 7075T6 6M	
17	20G-2431	SPROG CENTER BRACKET 98	2
18	35C-2511-60	TUBE 1.0" * .042" AN 7075T6 6M	
	40M-1162	SPROG ASSY - FUSION ALUMINUM	2

WILLS WING
500 BLUERIDGE AVE • ORANGE, CA 92665 • PH/FAX (714) 998-6359 / 998-0647

TITLE: Fusion Aluminum Sprog and Hardware Assembly

SLDDWF ID:	DOCUMENT ID:	DRAWN:	REVISED:	STATUS:	BY:
Sprog Alum	83E10.0	10/15/98	10/15/98	Released	PEARSON

83E09 VG Folding Base Tube

ID	PART NO	DESCRIPTION	QNT
1	10C-5171	BOLT NAS 623-4-17	2
2	10C-5071	BOLT NAS 623-4-7	2
3	10U-5095	WASHER NYLON .560 *.320 *.013	4
4	20E-2305	TANG 3 HOLE FOLDNG BASE CENTER	2
5	40F-1391	SLEEVE FOLDING BASETUBE CENTER	1
6	10N-1740	CLINCH NUT 1/4 MS21042-4	4
7	40F-1342	BASETUBE HALF AT68 FOLDING SPD	2
ITEM NO.7 40F-1342 ARE ASSEMBLIES WITH NO USER SERVICABLE PARTS. COMPONENT PARTS ARE LISTED BELOW			
8	15A-1401	GRIP BASETUBE POLYFOAM	2
9	20A-1502	BUTTON SPRING DOUBLE	2
10	10K-4020	PIN COIL SPRING .250 * 1.123	4
11	20G-2001	CBAR PLUG FOLDING BASE CENTER	2
12	40P-4430	WIRE SAFETY FOLDING BASE AT65	2

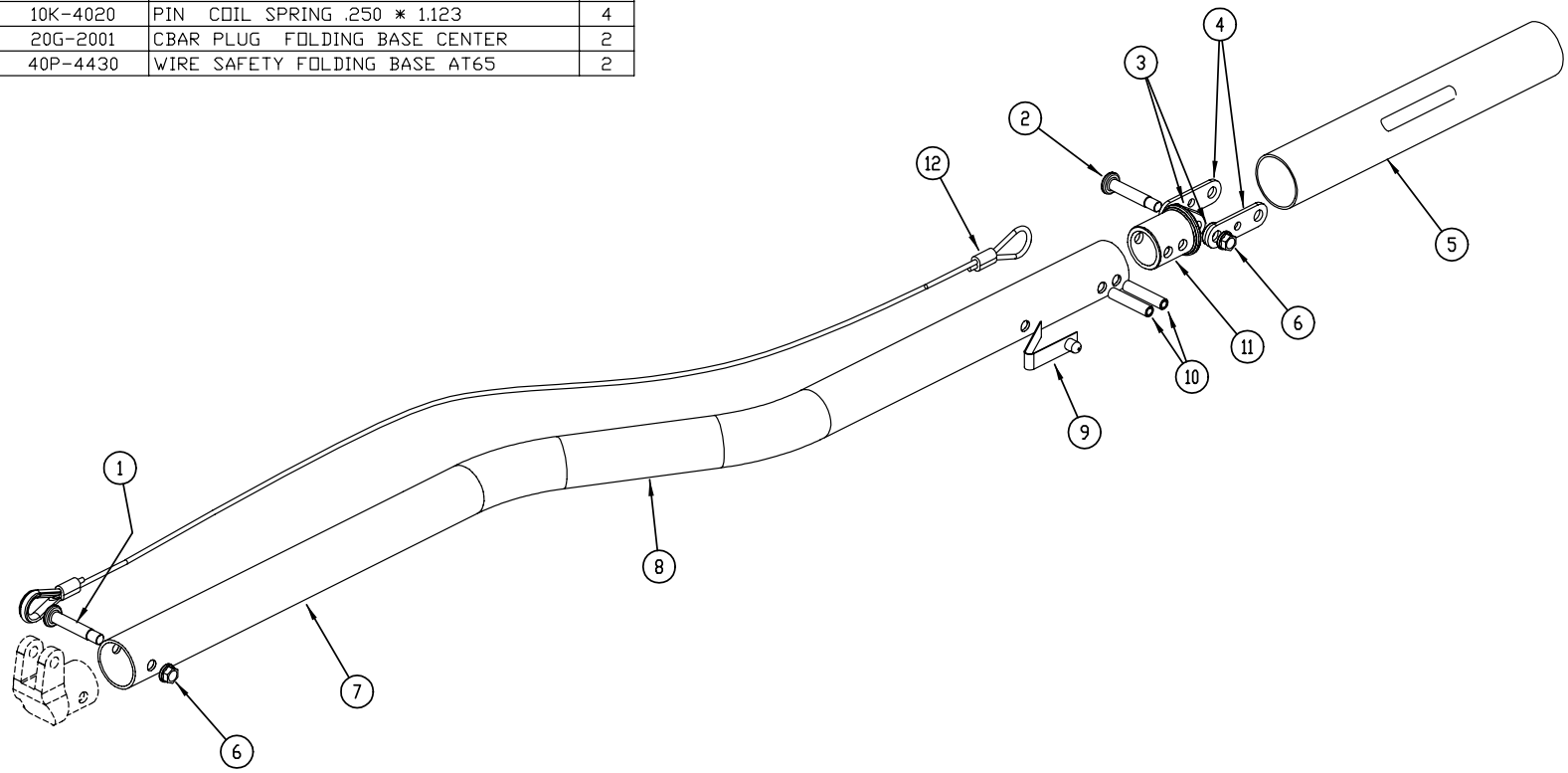

WILLS WING

500 BLUERIDGE AVE · ORANGE · CA · 92665 · PH/FAX (714) 998-6359 / 998-0647

TITLE: VG FOLDING BASE TUBE

PART NO:	DWG ID:	DOCUMENT ID:	REVISED:	DRAWN:	SCALE:
NA	83E09.DWG	83E09.0	06-26-97 sp	01-15-96 sp	NA

T.U.S. .X ± .05
.XX ± .015
.XXX ± .003
.XXXX ± .0005
ANGLES ± 1/2°

80E08 VG Control Bar

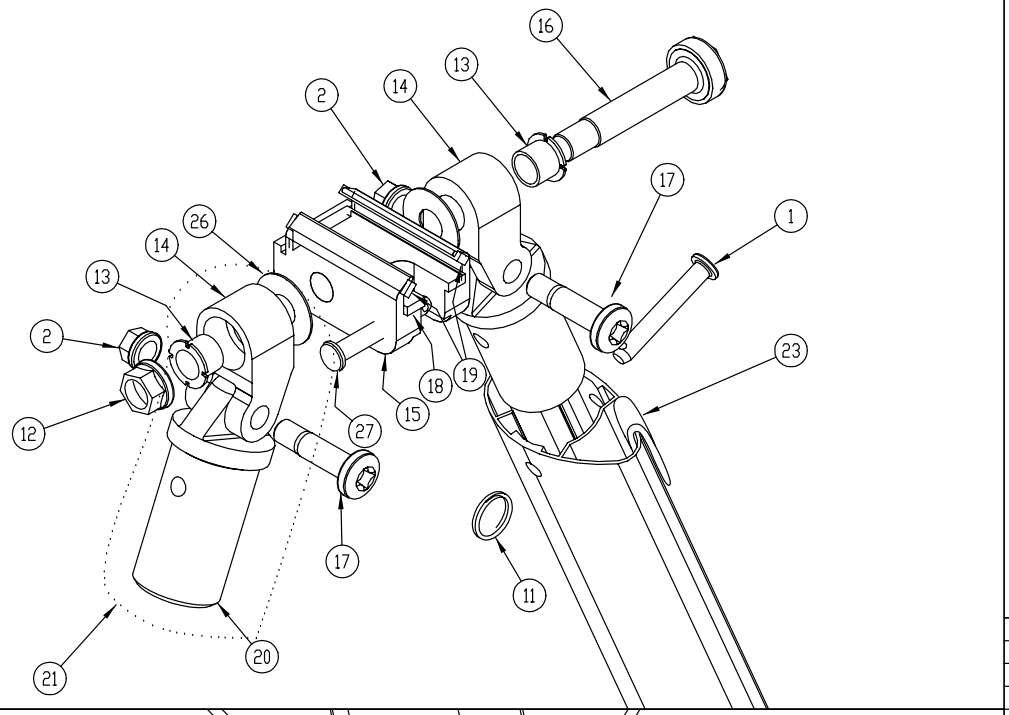

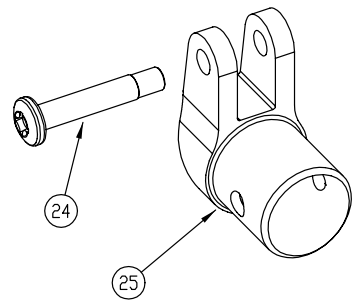

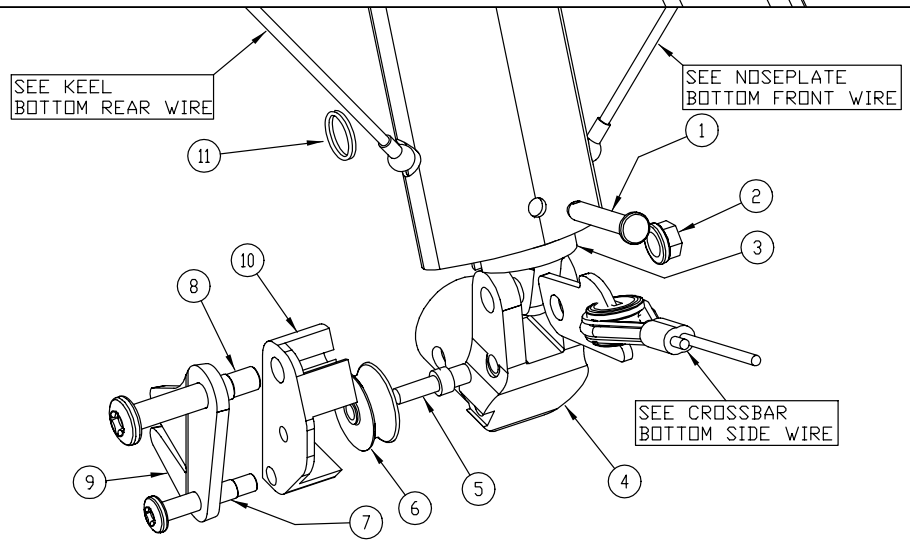

ID	PART NO	DESCRIPTION	QNT
1	10G-1330	CLEVIS PIN MS20392-2C33	4
2	10N-1740	CLINCH NUT 1/4 MS21042-4	4
3	20G-1424	CBAR PLUG AT LEG BOT STR TOE95	2
4	20G-1802	CBAR BRACKET AT BASE END VG	1
5	10K-4040	PIN VG PULLEY SS MACHINED	1
6	20P-1220	PULLEY ALUM MACH CBAR BASE VG	1
7	10D-1161	BOLT NAS 603-16P	1
8	10C-5241	BOLT NAS 623-4-24	1
9	20C-1801	JAMCLEAT KNIFE V-CUT / ROPE VG	1
10	20G-1803	BRACKET BASE PULLEY ROPE VG	1
11	10P-1100	SAFETY RING AN 9491 SMALL	5
12	10N-1750	CLINCH NUT 5/16 MS21042-5	1
13	10T-5113	BUSH SPLIT HEADED AT CB SHORT	2
14	20G-1711	CBAR ELBOW AT TOP STREAM	2
15	20G-2203	SLIDER LAYFLAT CBAR APEX 3	1
16	10A-3201	BOLT AN5-20A GROUND & SLOTTED	1
17	10C-5111	BOLT NAS 623-4-11	2
18	15J-2003	GLIDE NOTCHED LAFLT APEX SLDR	1
19	15J-2002	GLIDE LAYFLAT APEX SLIDR SIDE	2
20	20G-1433	CBAR PLUG AT LEG TOP STR TOEIN	2
21	45G-3064	COVER NEOPRENE CB APEX RT VG	1
22	45G-3062	COVER NEOPRENE CBAR APEX LEFT	1
23	15A-1610	PROTECTOR VG ROPE - UHMW TAPE	1
24	10C-5121	BOLT NAS 623-4-12	1
25	20G-1801	CBAR BRACKET AT BASETUBE END	1
26	10U-5125	WASHER NYLON .75 * .316 * .020	2
27	10G-1370	CLEVIS PIN MS20392-2C37	1

WILLS WING
500 BLUERIDGE AVE • ORANGE • CA • 92665 • PH/FAX (714) 998-6359 / 998-0647

TITLE: VG CONTROL BAR

PART NO:	DWG ID:	DOCUMENT ID:	REVISED:	DRAWN:	SCALE:
NA	80E08.DWG	80E08.0	06-26-97	01-15-96 sp	NA

T.U.S. .X ± .05
.XX ± .015
.XXX ± .003
.XXXX ± .0005
ANGLES ± 1/2°

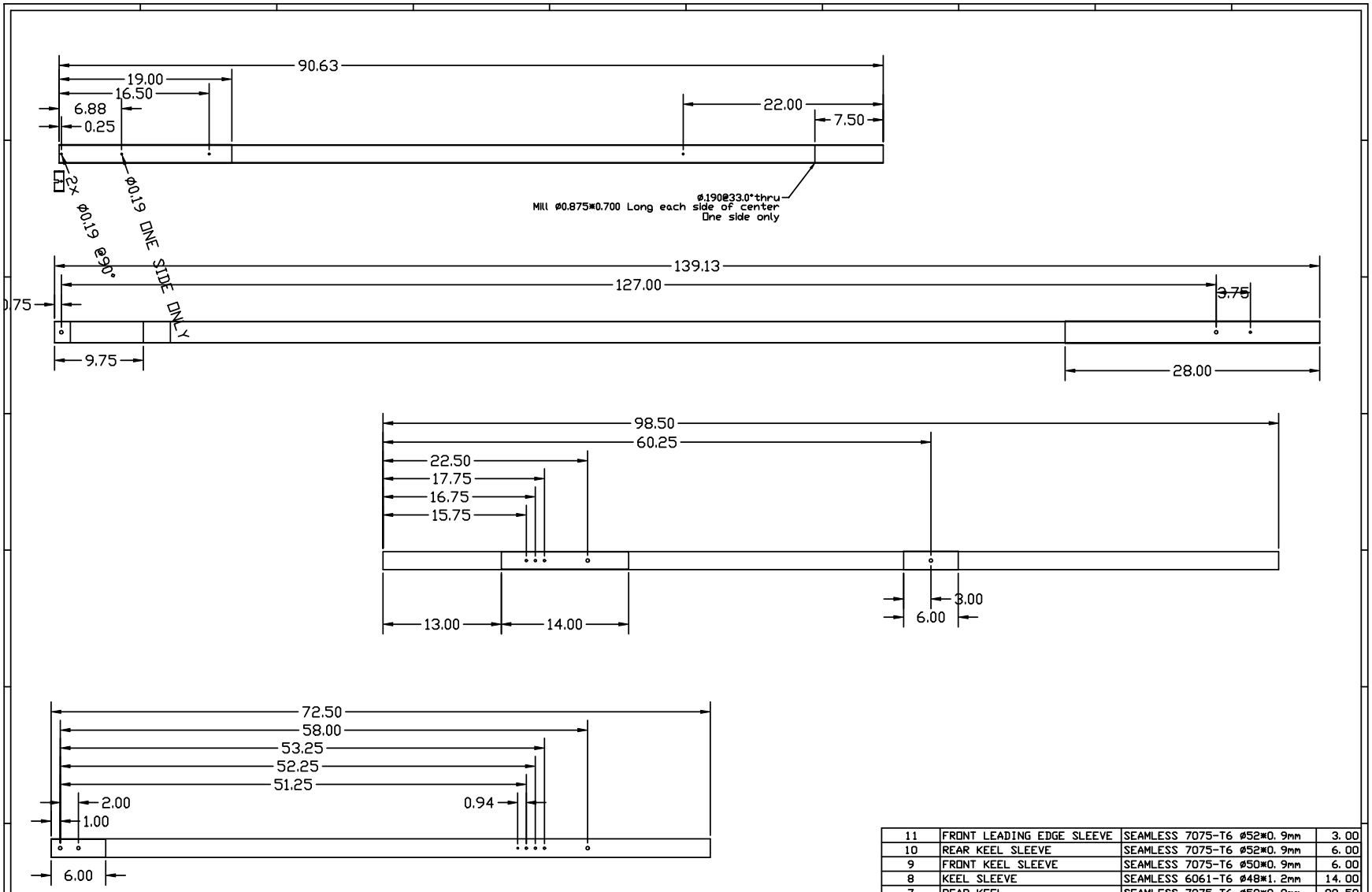

ID	DESCRIPTION	MATERIAL	IN
11	FRONT LEADING EDGE SLEEVE	SEAMLESS 7075-T6 ø52*0.9mm	3.00
10	REAR KEEL SLEEVE	SEAMLESS 7075-T6 ø52*0.9mm	6.00
9	FRONT KEEL SLEEVE	SEAMLESS 7075-T6 ø50*0.9mm	6.00
8	KEEL SLEEVE	SEAMLESS 6061-T6 ø48*1.2mm	14.00
7	REAR KEEL	SEAMLESS 7075-T6 ø50*0.9mm	98.50
6	FRONT KEEL	SEAMLESS 7075-T6 ø52*0.9mm	72.50
5	FRONT LEADING EDGE SLEEVE	SEAMLESS 7075-T6 ø62*0.9mm	2.00
4	FRONT LEADING EDGE SLEEVE	SEAMLESS 7075-T6 ø62*0.9mm	28.00
3	FRONT LEADING EDGE	SEAMLESS 7075-T6 ø60*0.9mm	139.13
2	REAR LEADING EDGE SLEEVE	SEAMLESS 7075-T6 ø52*0.9mm	19.00
1	REAR LEADING EDGE	SEAMLESS 7075-T6 ø50*0.9mm	90.63

WILLS WING

500 BLUERIDGE AVE • ORANGE • CA • 92665 • PH/FAX (714) 998-6359 / 998-0647

TITLE: **Fusion 150**

PART NO:	DWG ID:	DOCUMENT ID:	MATERIAL:	DRAWN:	SCALE:
NA	Frame Plans F.	NA	NA	R10-15-98 sp	NA

T.U.S. .X ± .05
.XX ± .015
.XXX ± .003
.XXXX ± .0005
ANGLES ± 1/2°

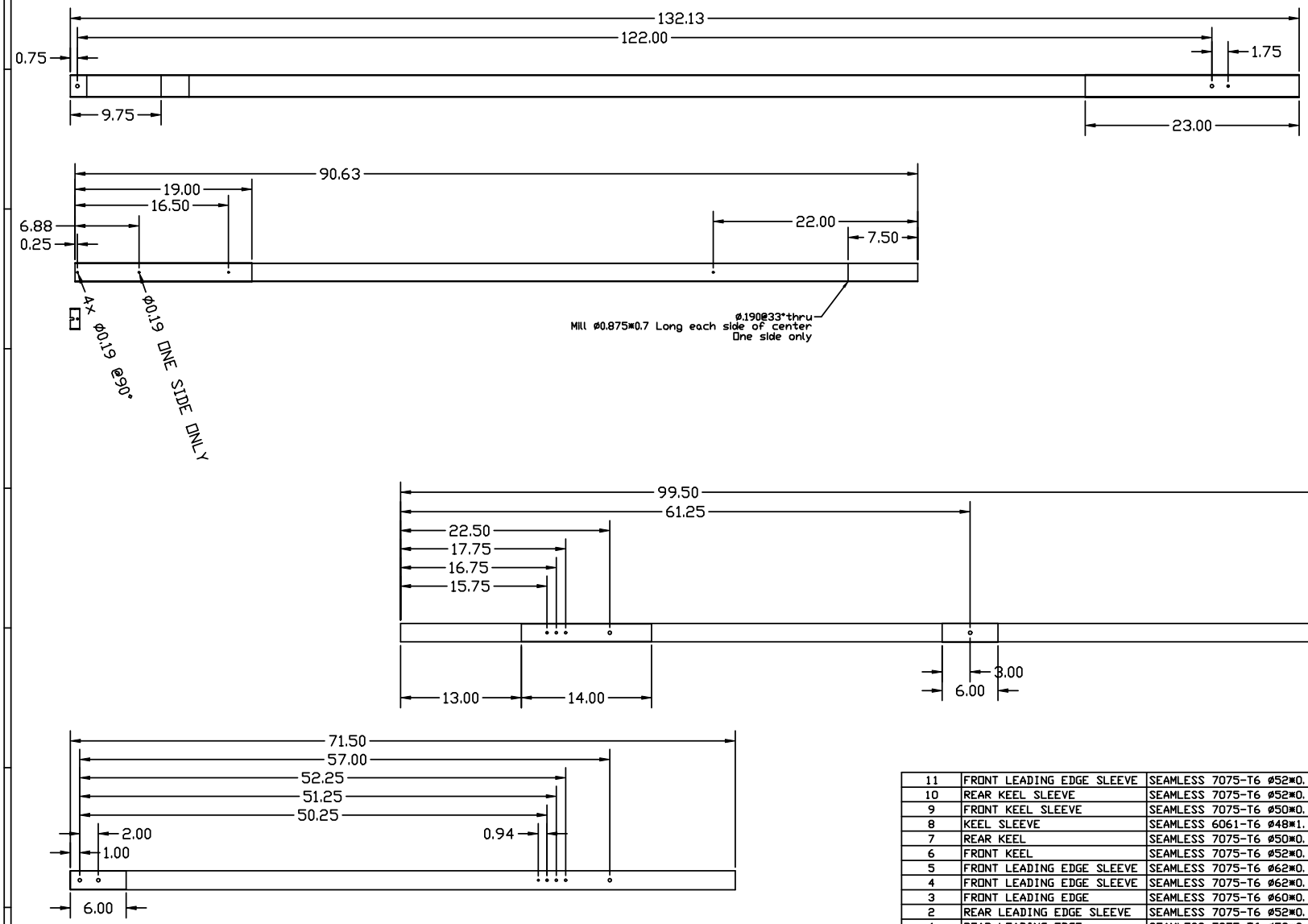

ID	DESCRIPTION	MATERIAL	IN
11	FRONT LEADING EDGE SLEEVE	SEAMLESS 7075-T6 Ø52*0.9mm	3.00
10	REAR KEEL SLEEVE	SEAMLESS 7075-T6 Ø52*0.9mm	6.00
9	FRONT KEEL SLEEVE	SEAMLESS 7075-T6 Ø50*0.9mm	6.00
8	KEEL SLEEVE	SEAMLESS 6061-T6 Ø48*1.2mm	14.00
7	REAR KEEL	SEAMLESS 7075-T6 Ø50*0.9mm	99.50
6	FRONT KEEL	SEAMLESS 7075-T6 Ø52*0.9mm	71.50
5	FRONT LEADING EDGE SLEEVE	SEAMLESS 7075-T6 Ø62*0.9mm	2.00
4	FRONT LEADING EDGE SLEEVE	SEAMLESS 7075-T6 Ø62*0.9mm	23.00
3	FRONT LEADING EDGE	SEAMLESS 7075-T6 Ø60*0.9mm	132.13
2	REAR LEADING EDGE SLEEVE	SEAMLESS 7075-T6 Ø52*0.9mm	19.00
1	REAR LEADING EDGE	SEAMLESS 7075-T6 Ø50*0.9mm	90.63

WILLS WING

500 BLUERIDGE AVE · ORANGE · CA · 92665 · PH/FAX (714) 998-6359 / 998-0647

TITLE: **Fusion 141**

PART NO:	DWG ID:	DOCUMENT ID:	MATERIAL:	DRAWN:	SCALE:
NA	Frame Plans F.	NA	NA	R10-15-98 sp	NA

T.U.S. .X ± .05
.XX ± .015
.XXX ± .003
.XXXX ± .0005
ANGLES ± 1/2°

Note:
Replaces Item 5 and Item 6 Drawings 82E01 and 84E02
and Items 15, 18 Drawing 80E06

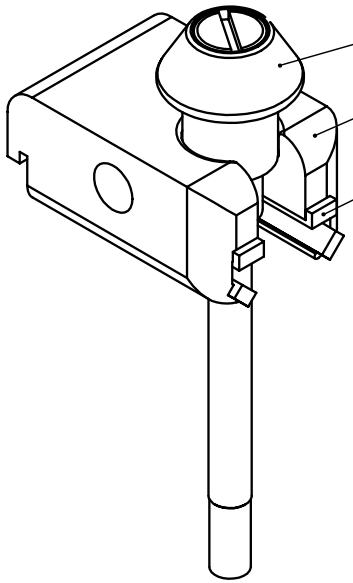

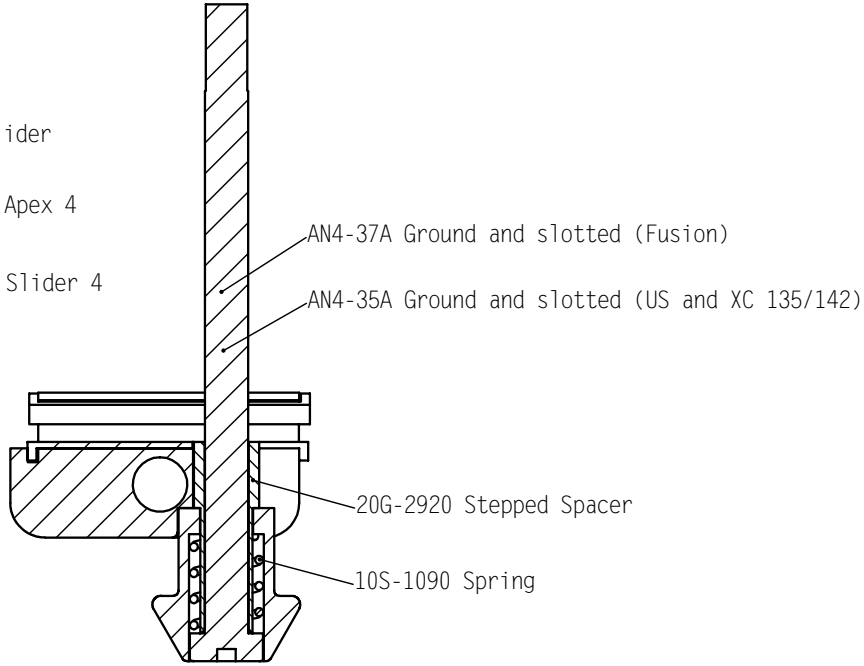

A-A

WILLS WING
500 BLUERIDGE AVE •ORANGE, CA 92865 •PH/FAX (714)998-6359/998-0647

TITLE: **Button Lock Apex Slider Assembly**

Document ID:	DWG ID:	DATE:	REVISED:	BY:
na	na	06-29-98	-	Pearson

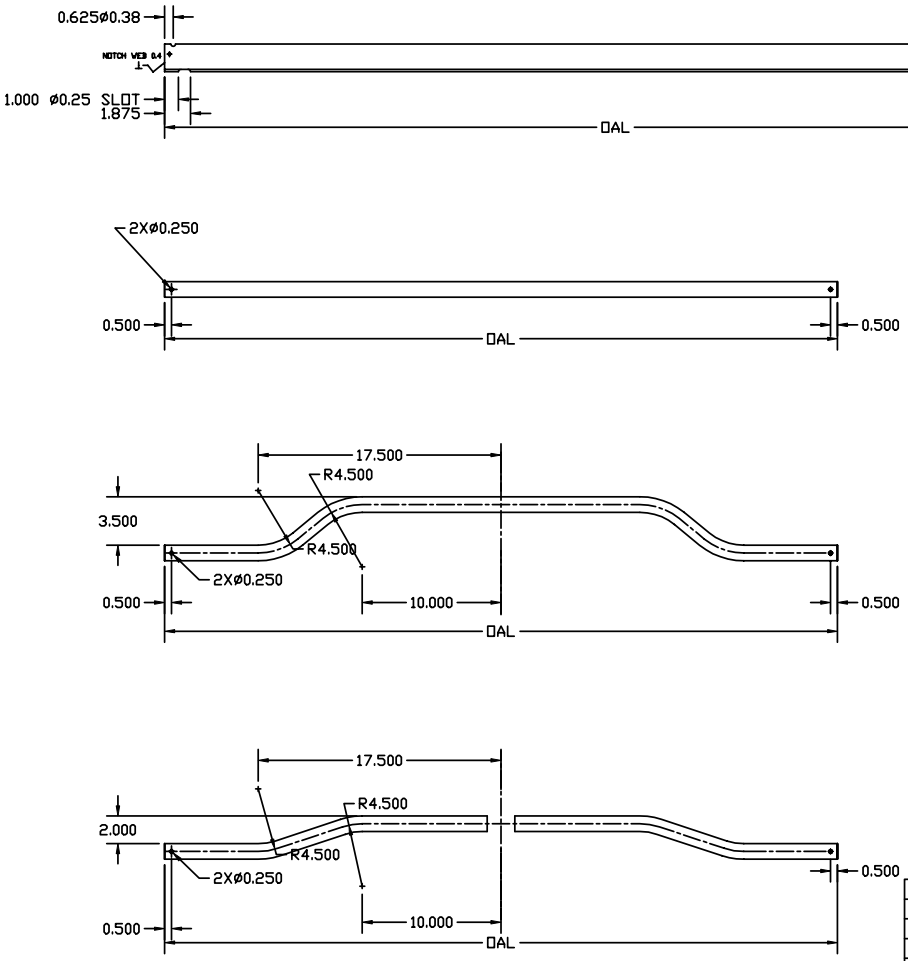

MODEL	ID	DESCRIPTION	OAL	MATERIAL SPEC
ROUND BASETUBE 0.065 WALL				
Fusion 141	40F-1331	BASE TUBE AT 65 SPEEDBAR	53.50	SD 6061-T6 1.125OD*.065t
Fusion 150	40F-1341	BASE TUBE AT 68 SPEEDBAR	56.00	SD 6061-T6 1.125OD*.065t
ROUND BASETUBE 0.095 WALL				
Fusion 141	40F-1337	BASE TUBE AT 65 SPEEDBAR .095	53.50	SD 6061-T6 1.125OD*.095t
Fusion 150	40F-1347	BASE TUBE AT 68 SPEEDBAR .095	56.00	SD 6061-T6 1.125OD*.095t
SPEEDBAR				
Fusion 141	40F-1331	BASE TUBE AT 65 SPEEDBAR	53.50	SD 6061-T6 1.125OD*.065t
Fusion 150	40F-1341	BASE TUBE AT 68 SPEEDBAR	56.00	SD 6061-T6 1.125OD*.065t
FOLDING SPEEDBAR				
Fusion 141	40F-1335	BASE CPLT ASSY AT65 FOLD NO BR	53.50	SD 6061-T6 1.125OD*.065t
Fusion 150	40F-1345	BASE CPLT ASSY AT68 FOLD NO BR	56.00	SD 6061-T6 1.125OD*.065t
STREAMLINE LEG				
Fusion 141	40G-1335	LEG AT 65 STREAMLINE	65.00	EP 6063-T6 WW 1.0 * 2.0
Fusion 150	40G-1345	LEG AT 68 STREAMLINE	68.00	EP 6063-T6 WW 1.0 * 2.0

(SD)Seamless Drawn (EP)Extruded Profile (OD)Outside Diameter (mm)Millimeter (t)hick (NA)not applicable (OAL)over all length

WILLS WING
500 BLUERIDGE AVE · ORANGE · CA · 92665 · PH/FAX (714) 998-6359 / 998-0647

TITLE: Fusion Control Bar

PART NO:	DWG ID:	DOCUMENT ID:	APPROVED:	DRAWN:	SCALE:
NA	F_CBAR.DWG	NA	10-15-98 sp		NA

T.U.S. .X ± .1
.XX ± .05
.XXX ± .01
.XXXX ± .005
ANGLES ± 1/2°